REMOTE SEAL TYPE DIFFERENTIAL PRESSURE TRANSMITTER

DATA SHEET **FKD···5/FDD···5**

The FCX -AIII remote seal type differential pressure transmitter accurately measures differential pressure and converts it into an output signal of 4~20mA DC.
The transmitter utilizes a unique micromachined capacitance silicon sensor with state-of-the-art microprocessor tech nology to provide exceptional performance and functionality.It's small volume, light weight, good environment adaptability, and applicable to all fields. If using the hand held communicator(sold separately), it can be set and display via remote operation, without affecting the DC 4~20mA output signal of transmitter. FCX-AIII series transmitters with safety funtion have obtained the certificate of SIL certification by TÜV.

Features

1. High accuracy
   Remote seal type differential pressure transmitter can be carried out with high accuracy measurement in the range of 0.32 ~ 3000kPa. Standard accuracy: ± 0.2%
   High accuracy(optional): ± 0.1%
   There's no need to linear calibration when carrying out zero elevation or suppression.
2. Excellent environmental adaptaboility
   The advanced floating cell protects sensor from temperature and overpressure effect, and controls the total measurement error of the filed to the minimun.
3. Excellent operability and easy to use
   It has an excellent operability and easy to use in any application.
   - All range meet the requirements of explosion-proof.
   - 5-digit digital indiactor
   - Stainless steel AMP case
   - Built-in RFI filter and lightning arrester
   - Various anti-corrosive materials
   - Products used for high temperature and high vacuum
   - Built-in local configurator with 3 push buttons
4. The transmitter can communicate using FUJI, HART, communication protocol, and also can use FOUNDATION FIELDBUS or PROFIBUS protocol after changing the electronic circuit.

Specifications

Functional specifications

- Measured fluid: Liquid, gas, or bapor
- Measuring range:

Model	Span limit [kPa]		Range limit [kPa]	
	Min.	Max.	Lower	Upper
FKD□□3 FDD□□3	0.32	32	-32	32
FKD□□5 FDD□□5	1.3	130	-130	130
FKD□□6 FDD□□6	5	500	-500	500
FKD□□8 FDD□□8	30	3000	-3000	3000

Note: Recommended span should be greater than 1/40 of max. span.

- Operating pressure: Up to the maximun operating pressure of flange.
- Process temperature, Lower range limit:

Fill fluid	13th digit Code	Process Temperature	Operating pressure
Fluorinated oil	W, A, D	-20 ~ 120°C	Above atmospheric pressure
Silicone oil	H	-15 ~ 315°C	
Silicone oil	J	20 ~ 350°C	
Silicone oil	Y, G	-45 ~ 205°C(Note)	Above 2.7kPa abs See Figure1
Silicone oil	S	-15 ~ 250°C	
Silicone oil	T	20 ~ 320°C	
Silicone oil	K	-15 ~ 200°C	Above 0.13kPa abs See Figure2
Food grade oil(Neobee)	F	-15 ~ 120°C	Above atmospheric pressure
Low temperature oil	X	-75 ~ 150°C	

Note: When using the plastic coated capillary, the temperature range is -45 ~ 120°C.

- Remote function: Refer to table 1
  Note: HHC's version must be higher than 7.0 (or FXW□□□□1-□4).
- Output signal: (1)FKD: DC4~20mA+HART protocol
  (2)FDD: FOUNDATION Fieldbus protocol or PROFIBUS-PA
- Allowable load resistance: 0 ~ 600Ω (at DC 24V)
  (Refer to figure 2) For communication with HHC, min. of 250Ω resistor is required.
- Power supply:
  (Refer to figure 2)

General	DC10.5 ~ 45V
Intrinsic safety	DC10.5 ~ 26V
With arrestor	DC10.5 ~ 32V

- Condition of communication line: Length: up to 2km
  (0.75 ~ 1.25mm² Using twisted pair cable when instrument control cable is more than 1km.)
  Load resistance: 250 ~ 600Ω
  (DC24V, including resistance of cable)
  Load capacitance: 0.22μF or less
  Load inductance: 3.3mH or less
  sapcing with power line: 15cm or more
  (Please avoid parallel wiring.)
  Note: Line condition of intrinsic safety and explosion-proof is different, please refer to the instruction manual.

FKD

- Saturation current: Upper limit 20.0 ~ 22.5mA(variable)
  Lower limit 3.2 ~ 4.0mA(variable)
  (Settable in increments of 0.1mA with HHC or local configurator unit with LCD display.)
- Damping: The time constant is adjustable from 0.06 to 32 seconds.
- Adjustment function: Zero and span are adjustable by the external adjustment screw, or by local configurator with 3 push buttons, or by HHC.
- Zero elevation/suppression: Zero can be elevated or suppressed within the range of -100% to100% URL.
- Normal/reverse action: Selectable from HHC or LCD unit with local adjustment function.
- Burnout direction: Output hold
  Output 20.0 ~ 22.5mA (variable)
  Output 3.2 ~ 4.0mA (variable)
  (Settable in increments of 0.1mA with HHC or local configurator unit with LCD display.)
- Explosion proof: Refer to table 4
- Ambient temperature: -40 ~ +85°C

  With arrester: -40 ~ +60°C
  Filling Fluorinated oil: -10 ~ +60°C
  Silicone oil J,T,H,S,K: -10 ~ +85°C

  Note: 1)When silicone oil is J,T, please wrap the thermal insulation material on the capillary. When silicone oil is J,K,T,H,S,K and the length of capillary is more than 7m, the optimum temperature is +55℃.
  2)The optimum operating temperature of digital indicator is -30 ~ +80°C, response is slow below -30°C.
- Storage temperature: -40～+90°C
- Weather resistance: DIN 40040 GPC
- EMC applicable standard: EN61326-1: 2006 CE

FKD

Performance specifications

Silicone oil fill, SUS316L diaphragms, 4 to 20mA analog output in linear mode.

- Accuracy rating: (including linearity, hysteresis, repeatability)
  (Standard)
  For spans greater than 1/10 of URL:
  ± 0.2%
  For spans below 1/10 of URL:
  $\pm \left(0.1+0.1\frac{0.1\times \text{URL}}{x}\right)\%$
  (Optional) (21th digit code: H,K)
  For spans greater than 1/10 of URL:
  ± 0.1%
  For spans below 1/10 of URL:
  $\pm \left(0.05+0.05\frac{0.1\times \text{URL}}{x}\right)\%$
- Stability: Zero shift ±0.2% of upper range limit (URL) for 10 years.
- Ambient temperature effect: Changed per 28°C in the range of -40°C ~ +85°C.
  (Standard) Zero shift: $\pm \left(0.35\frac{\text{URL}}{x}\right)\%$
  Total shift: $\pm \left(0.5\frac{\text{URL}}{x}\right)\%$
  (Optional) (21th digit code: J, K)
  Zero shift:
  ± 0.3%(x≥ 1/4URL)
  $\pm \left(0.1+0.2\frac{0.25\times \text{URL}}{x}\right)\%$(x<1/4URL)
  Total shift:
  ± 0.4%(x≥ 1/4URL)
  $\pm \left(0.2+0.2\frac{0.25\times \text{URL}}{x}\right)\%$(x<1/4URL)
  In the formual : x: SPAN
  URL: Upper range limit

Note: (1) It's the output change when remote flange and transmitter body at the same height and temperature.
(2) When there is temperature difference between remote flange, capillary and transmitter body, the error will increase.

- Unidirectional overrange effect: Zero shift ± 0.1% of URL /flange nominal pressure.
  In case of 7th digit code(material) is not "V,W,A,B,C,D,E,N,Q,S", the value is 2 times of above.
- Static pressure effect: Zero shift ± 0.2% of URL /1MPa
  In case of 7th digit code(material) is not "V,W,A,B,C,D,E,N,Q,S", the value is 2 times of above.
  Span shift -0.2±0.2% of SPAN/1MPa
- Overrange effect: Zero shift ±0.2% of URL for nominal flange pressure.
- Supply voltage effect: ± 0.005% /1V(DC 16.1 ~ 45V)
- Insulation strength: 500VAC, 50/60Hz, 1 min, between circuit and earth.
- Insulation resistance: More than 100MΩ at 500V DC, between circuit and earth.
- Update rate: 60ms
- Response time:

Model	*Time constant [s]	Dead time [s]
FKD□□3 FDD□□3	2	approx. 0.12
FKD□□5~6 FDD□□5~6	1.7	

Note: *Capillary length 1.5m, value at 23°C.

Structure and material

- Flange materials: SUS304、SUS316 or carbon steel
- Detecting unit materials:

Material code	Seal diaphragm	Other wetted parts
V, A, B, C, D	SUS316L	SUS316
E, N, Q, S	SUS316L	SUS304
W	Hastelloy-C	SUS316
H, F, G, K, L	Hastelloy-C	Hastelloy-C
J, 5, 6, 7, 8	SUS316L Gold-plated	SUS316
M	Monel	Monel
T,1,2,3,4	Tantalum	Tantalum
P	Titanium	Titanium
R	Zirconium	Zirconium

- Amp case and case cover materials: Aluminium die casting + Polyester coating (case color: silvery, case cover color: blue) or stainless steel(SCS14)
- Structure of case: Immersion protected type JIS C 0920 (Equivalent to IEC IP67, NEMA 6/6P)
- Outline dimension: According to the outline drawing.
- Weight: approx. 10~20kg
- Conduit connection: G1/2, 1/2-14NPT, M20× 1.5, Pg13.5 (Refer to the model code table for details.)
- External terminal: M3.5 Screw
- Preocess connection: According to the following standards (Please refer to the model code for dteails.)
  (According to data sheet)
  JIS : 10K 80A, 10K 100A, 30K 80A, 30K 100A,
  ANSI/JPI : 150LB 3B, 150LB 4B, 300LB 3B, 300LB 4B
  GB/T/HG : PN10 DN80 , PN10 DN100 , PN50 DN80, PN50 DN100
- Diaphragm Extension length: 0, 50, 100, 150, 200mm (according to data sheet)
- Mounting method: Mounting on 50A(2B) pipe with U-bolt, detecting part mounting with flange, flange clamping method (sheet type).
- Direction of AMP unit: Amp unit can be turned clockwise or counterclockwise by 90°or 180°, relative to the direction of detecting unit.
- Length of capillary: Max 15m
  (When the length is more than 7m and silicone oil is “H,J,S,T,K”, the ambient temperatureis is below ＋55°C.)
- Wrapping material of capillary: Plastic coated or stainless steel hose

Optional specifications

- Analog indicator: Built in amplifer unit Class 2.5, moving-coil, movement 90°, 0 ~ 100% evenly divided scale or actual scale
- Digital indicator: Built in amplifer unit, 5 digit LCD and unit dispaly, 0 ~ 100% scale display, actual scale display or 0 ~ 100% square root display. Optimum operating temperature range: -30 ~ +80°C.
- Digital indicator: (with 3 push buttons) DIsplaying or setting the items of table 1 via 3 push buttons of digital indicator.
- Arrester: Built in amplifer unit Lightning performance: 4kV(1.2× 50μs)
- Degreasing treatment for oxygen: Filling fluorinated oil, degreasing and cleaning for wetted parts, available only for 7th digit code (material) "V,W,A,B,C,D,E,N,Q,S".
- Chlorine measurement: Filling fluorinated oil, available only for 7th digit code (material) "H,F,J, K,L,T".
- Anti-corrosive coating of detecting unit: Epoxy and polyurethane double coating
- Stainless steel tag plate: The plate can be engraved up to 14 characters (lettters and numbers)

The product conforms to the requoirments of European EMC directive "Electromagnetic Compatibility Directive2004/108/EC". The detail content is recorded in the techiacal construction file nmber TN5A0704. The applicable standards are as follows:

Emission list:
EN 61326-1 : 2006 Class A (Industrial location)

Frequency range	Limits	Reference standard
30 ~ 230MHz	40dB(μV/m) quasi peak, measured at 10m distance	EN55011:1998 +A1:1999 +A2:2002 (Group1 Class A)
230 ~ 1000MHz	47dB(μV/m) quasi peak, measured at 10m distance	

Immunity requirements:
EN 61326-1 : 2006 Table2 (Industrial location)

Phenomenon	Test value	Basic standard	P.C.
Electrostatic discharge	2/4kV (Contact) 2/4/8kV (Air)	IEC 61000-4-2:1995 +A1:1998+A2:2001	B
Electromagnetic field	10V/m(80 ~ 1000MHz) 3V/m(1.4 ~ 2.0GHz) 1V/m(2.0 ~ 2.7GHz) 80%AM(1kHz)	IEC 61000-4-3:2002 +A1:2002	A
Rated power frequency magnetic field	30 A/m 50/60 Hz	IEC 61000-4-8:1993 +A1:2001	A
Burst	2kV	IEC 61000-4-4:2004	B
Surge	1.2/50μs(Voltage) 8.0/20μs(Current) 0.5/1kV line to line 0.5/1/2kV line to ground	IEC 61000-4-5:1995 +A1:2001	B
Conducted RF	0.15 ~ 80MHz 3V 80%AM(1kHz)	IEC 61000-4-6:1996 +A1:2001	A

Definition of performance criteria:
A: During testing, normal performance within the specification limits.
B: During testing, temporary degradation, or less of function or performance which is self-recovering.

FKD

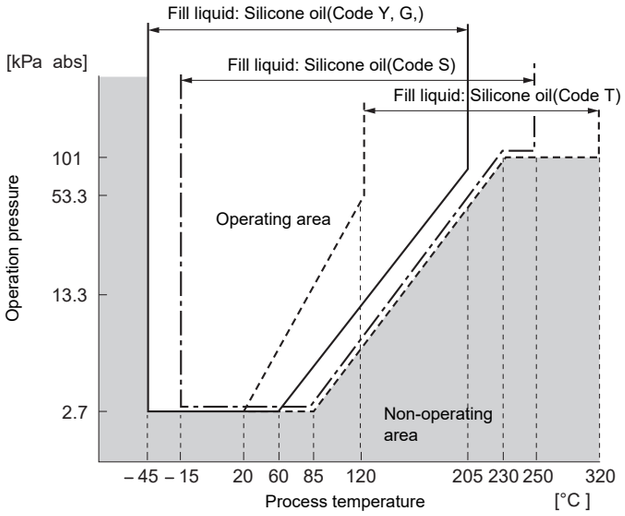

Note: When using the transmitter in a vacuum area, locate it lower than the flange.

Figure 1 Relation between process temperature and operating pressure

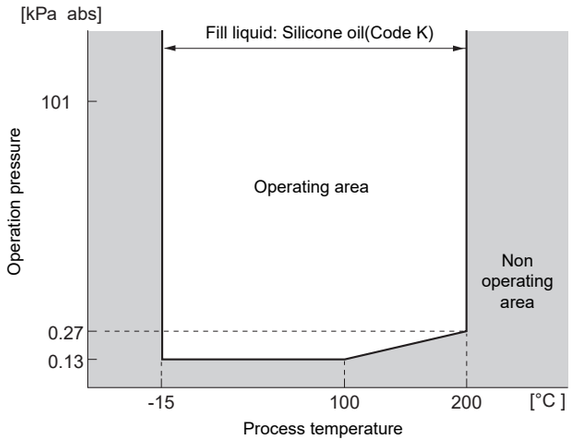

Figure 2 Relation between process temperature and operating pressure

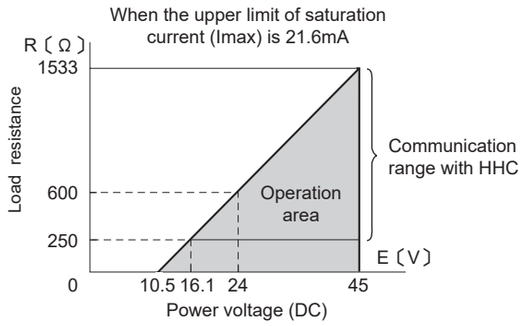

〔Note〕The load resistance varies according to the upper limit of saturation current.

$$R〔\Omega〕 = \frac{E〔V〕- 10.5}{(Imax〔mA〕 + 0.9) \times 10^{-3}}$$

Figure 3 Operation area of power voltage and load resistance

Table1 Adjustment function

No.	Items	HHC (Model:FXW)Note1)		Local configurator (With 3 push buttons)	
		Display	Set	Dispaly	Set
1	Tag No.	○	○	○	○
2	Type	○	○	○	○
3	Serial No. & Software Version	○	—	○	—
4	Engineering unit	○	○	○	○
5	Range Limit	○	—	○	—
6	Measuring range	○	○	○	○
7	Damping	○	○	○	○
8	Output mode	○	—	○	—
9	Burnout direction	○	○	○	○
A	Zero/span calibration	○	○	○	○
B	Calibration of output circuit	—	○	—	○
C	Measured data	○	—	○	—
D	Self-diagnosis	○	—	○	—
E	Printer function	○	—	—	—
F	Lock of adj. function	○	○	○	○
G	Indication of digital indicator	○	○	○	○
H	Linzearize	○	○	—	—
I	Rerange	○	○	○	○
J	Saturation current Write	○	○	○	○
K	protect	○	○	○	○
L	History -Calibration history -Temperature history	 ○ ○	 ○ —	 ○ ○	 ○ —

Nore1) The version of HHC must be higher than 7.0 when it supports FCX-AIII series transmitter(or FXW□□□□1–□4).

It can upgrade the version by changing ROM, please consult our company's windows or agency shop nearby for deatils.

Scope of delivery

Instrument body, pipe mounting bracket
(according to type selection)

Related products

・Hand held communicator (Model: FXW):
Hand held, built-in battery, setting, display
For the details, please refer to data sheet (CSDS8-47).

Ordering information

1. Model code
2. Span
3. Please select the direction of output (Notuse/OVER/UNDER) when the transmitter is fault (Burnout). If unspecified, it is Notuse.
4. Please select the output mode (linear or square root). If unspecified, it is linear mode.
5. If the scale of indicator is selected to actual scale (9th code: D,H,P,S), please select the items of display (digit, scale, unit , etc).
6. Please select the tag plate according to need.(up to 14 digit, consist of lettters and numbers).

Model code

Digit	Discription		Note	1 2 3 4 5 6 7 8 9 10 11 12 13 14 15 16 17 18 21 22 ← Digit No.
	Remote seal type differential pressure transmitter DC4~20mA+HART FOUNDATION Fieldbus and PROFIBUS			F D F K D 5 F D D 5
4	<AMP case>			
	<Conduit conn.>	<Case type>		
	G 1/2	T type		5
	1/2-14NPT	T type		6
	Pg 13.5	T type		7
	M20× 1.5	T type		8
	G 1/2	L type		S
	1/2-14NPT	L type		T
	Pg 13.5	L type		V
	M20× 1.5	L type		W
5	<Flange materials>	<Flange standards>		
	SUS304	JIS 10K 80A		0
	SUS304	JIS 10K 100A		1
	SUS304	JIS 20K 80A		M
	SUS304	JIS 30K 80A		2
	SUS304	JIS 30K 100A		3
	SUS304	ANSI/JPI 150LB 3B		4
	SUS304	ANSI/JPI 150LB 4B		5
	SUS304	ANSI/JPI 300LB 3B		6
	SUS304	ANSI/JPI 300LB 4B		7
	SUS304	DIN PN 16/40 DN80		8
	SUS304	DIN PN 16 DN100		9
	SUS304	ANSI/JPI 600LB 3B		R
	Carbon steel	JIS 10K 80A		A
	Carbon steel	JIS 10K 100A		B
	Carbon steel	JIS 30K 80A		C
	Carbon steel	JIS 30K 100A		D
	Carbon steel	ANSI/JPI 150LB 3B		E
	Carbon steel	ANSI/JPI 150LB 4B		F
	Carbon steel	ANSI/JPI 300LB 3B		G
	Carbon steel	ANSI/JPI 300LB 4B		H
	Carbon steel	DIN PN 16/40 DN80		J
	Carbon steel	DIN PN 16 DN100		K
	SUS316	JIS 10K 80A		S
	SUS316	ANSI/JPI 150LB 3B		T
	SUS316	ANSI/JPI 150LB 4B		U
	SUS316	ANSI/JPI 300LB 3B		V
	SUS316	ANSI/JPI 300LB 4B		W
	SUS316	ANSI/JPI 600LB 3B		X
	None(sheet type)	JIS80A, ANSI/JPI3B, GB/T/HG DN80		P
	None(sheet type)	JIS100A, ANSI/JPI4B, GB/T/HG DN100		Q
	Chinese flange		Note20	Y
	High pressure flange(RTJ)		Note14	I
	Unequal diameter flange		Note21	N
	Other flanges		Note13	Z
6	<Span limit [kPa] >			
	0.32…32			3
	1.3… 130			5
	5…… 500			6
	30… 3000			8
7	<Diaphragm material>	<Other wetted parts>	<Extension length [mm]>	
	SUS316L	SUS316	0	V
	SUS316L	SUS316	0	X
	SUS316L	SUS316	50	A
	SUS316L	SUS316	100	B
	SUS316L	SUS316	150	C
	SUS316L	SUS316	200	D
	SUS316L	SUS304	50	E
	SUS316L	SUS304	100	N
	SUS316L	SUS304	150	Q
	SUS316L	SUS304	200	S
	Hastelloy C	Hastelloy C	0	H
	Hastelloy C	Hastelloy C	50	F
	Hastelloy C	Hastelloy C	100	G
	Hastelloy C	Hastelloy C	150	K
	Hastelloy C	Hastelloy C	200	L
	SUS316L Gold-plated	SUS316	0	J
	SUS316L Gold-plated	SUS316	50	5
	SUS316L Gold-plated	SUS316	100	6
	SUS316L Gold-plated	SUS316	150	7
	SUS316L Gold-plated	SUS316	200	8
	Hastelloy C	SUS316	0	W
	Monel	Monel	0	M
	Tantalum	Tantalum	0	T
	Tantalum	Tantalum	50	1
	Tantalum	Tantalum	100	2
	Tantalum	Tantalum	150	3
	Tantalum	Tantalum	200	4
	Titanium	Titanium	0	P
	Zirconium	Zirconium	0	R

FKD

Digit	Discription			Note	1 2 3 4 5 6 7 8	9	10	11	12	13	14	15	16	17	18	21	22 ← Digit No.
					F D												
	Remote seal type differential pressure transmitter				F K D 5								0				
	DC4~20mA+HART FOUNDATION Fieldbus and PROFIBUS				F D D 5								0				
8	<Version>			Note23	5												
9	<Field indicator>	<Indicator scale>	<Arrester>														
	None		None			A											
	Analog	0 ~ 100% evenly divided scale	None			B											
	Analog	0 ~ 100% square scale	None	Note3		C											
	Analog	Actual scale	None			D											
	None		Yes			E											
	Analog	0 ~ 100% evenly divided scale	Yes			F											
	Analog	0 ~ 100% square scale	Yes	Note3		G											
	Analog	Actual scale	Yes			H											
	Digital	0 ~ 100% scale display	None			L											
	Digital	Actual scale display	None			P											
	Digital	0 ~ 100% square root display	None			M											
	Digital	0 ~ 100% scale display	Yes			Q											
	Digital	Actual scale display	Yes			S											
	Digital	0 ~ 100% square root display	Yes			N											
	Digital(with local adj. function)	0 ~ 100% scale display	None			1											
	Digital(with local adj. function)	Actual scale display	None			2											
	Digital(with local adj. function)	0 ~ 100% square root display	None			3											
	Digital(with local adj. function)	0 ~ 100% scale display	Yes			4											
	Digital(with local adj. function)	Actual scale display	Yes			5											
	Digital(with local adj. function)	0 ~ 100% square root display	Yes			6											
	None	Foundation Fieldbus	None	Note15		A											
	None	Foundation Fieldbus	Yes	Note15		E											
	Digital	Foundation Fieldbus	None	Note15		P											
	Digital	Foundation Fieldbus	Yes	Note15		S											
	None	Profibus	None	Note15		R											
	None	Profibus	Yes	Note15		V											
	Digital	Profibus	None	Note15		T											
	Digital	Profibus	Yes	Note15		W											
10	<Explosion proof specifications>																
	General Non explosion proof						A										
	TIIS (Cable gland seel) explosion proof			Note17			C										
	TIIS intrinsic safety						G										
	FM Flameproof			Note19			D										
	FM Intrinsic safety						H										
	FM Combined of flameproof and intrinsic safety			Note19			V										
	ATEX Flameproof			Note18			X										
	ATEX Intrinsic safety						K										
	ATEX Type n						P										
	ATEX Combined of flameproof and intrinsic safety			Note18			M										
	IECEx Flameproof			Note18			R										
	IECEx Intrinsic safety						T										
	CSA Flameproof			Note19			E										
	CSA Intrinsic safety						J										
	NEPSI Flameproof						F										
	NEPSI Intrinsic safety						S										
	NEPSI Combined of flameproof, intrinsic safety and dust ignition proof						U										
11	<Capillary length[m]>	<Wrapping material of capillary>															
	1.5	Plastic coated		Note4,22				D									
	3	Plastic coated		Note4,22				E									
	5	Plastic coated		Note4,22				L									
	6	Plastic coated		Note4,22				F									
	7	Plastic coated		Note4,22				M									
	8	Plastic coated		Note4,22				N									
	10	Plastic coated		Note4,22				P									
	12	Plastic coated		Note4,22				G									
	15	Plastic coated		Note4,22				H									
	1.5	Hose (stainless steel)		Note22				Q									
	3	Hose (stainless steel)		Note22				R									
	5	Hose (stainless steel)		Note22				S									
	6	Hose (stainless steel)		Note22				T									
	7	Hose (stainless steel)		Note22				V									
	8	Hose (stainless steel)		Note22				W									
	10	Hose (stainless steel)		Note22				X									
	12	Hose (stainless steel)		Note22				J									
	15	Hose (stainless steel)		Note22				K									
12	<Special specification>																
	Standard specification								Y								
	Stainless steel tag plate								B								
	Anti-corrosive coating of detecting unit								M								
	Anti-corrosive coating of detecting unit, SS tag plate								N								
	Anti-corrosive coating of detecting unit,SS AMP case			Note11					P								
	Anti-corrosive coating of detecting unit,SS AMP case,SS tag plate			Note11					Q								

FKD

Digit	Discription	Note	1 2 3 4 5 6 7 8	9 10 11 12 13	14 15 16 17 18	21 22 ← Digit No.
	Remote seal type differential pressure transmitter DC4~20mA+HART FOUNDATION Fieldbus and PROFIBUS		F D F K D 5 F D D 5	- - -	- - - 0 - 0	- - -
13	<Treatment of wetted parts> <Fill fluid> Standard Silicone oil (General) Standard Fluorinated oil Standard Food grade oil(Neobee M20) Degreasing Silicone oil Standard Low temperature oil(Sylltherm XLT, -75°C~150°C. When process temperature is -120°C~60°C, this code is "C").			Y W F G X		
	Oxygen service Fluorinated oil Chlorine service Fluorinated oil Standard Silicone oil(for high temperature: -15~315°C) Standard Silicone oil(for high temperature: 20~350°C)	Note6 Note7 Note8 Note8		A D H J		
	Standard Silicone oil(for high temperature and vacuum: -15~250°C) Standard Silicone oil(for high temperature and vacuum: 20~320°C) Standard Silicone oil(for high temperature and high vacuum: -15~200°C)	Note6 Note6 Note6		S T K		
14	<Teflon diaphragm> None Yes	 Note9			Y C	
15	<Bolt/nut materials of process cover> None				0	
16 17 18	<Flange specifications> <Flange materials> GB/T/HG DN80 PN10/16 Carbon steel GB/T/HG DN80 PN10/16 SUS304 GB/T/HG DN80 PN10/16 SUS316	Note20 Note20 Note20 Note20				B 8 C B 8 U B 8 W
	GB/T/HG DN80 PN20(class150) Carbon steel GB/T/HG DN80 PN20(class150) SUS304 GB/T/HG DN80 PN20(class150) SUS316	Note20 Note20 Note20				C 8 C C 8 U C 8 W
	GB/T/HG DN80 PN50(class300) Carbon steel GB/T/HG DN80 PN50(class300) SUS304 GB/T/HG DN80 PN50(class300) SUS316	Note20 Note20 Note20				D 8 C D 8 U D 8 W
	GB/T/HG DN80 PN25/40 Carbon steel GB/T/HG DN80 PN25/40 SUS304 GB/T/HG DN80 PN25/40 SUS316	Note20 Note20 Note20				E 8 C E 8 U E 8 W
	GB/T/HG DN80 PN63 Carbon steel GB/T/HG DN80 PN63 SUS304 GB/T/HG DN80 PN63 SUS316	Note20 Note20 Note20				F 8 C F 8 U F 8 W
	GB/T/HG DN80 PN100 Carbon steel GB/T/HG DN80 PN100 SUS304 GB/T/HG DN80 PN100 SUS316	Note20 Note20 Note20				G 8 C G 8 U G 8 W
	GB/T/HG DN100 PN10/16 Carbon steel GB/T/HG DN100 PN10/16 SUS304 GB/T/HG DN100 PN10/16 SUS316	Note20 Note20 Note20				B 0 C B 0 U B 0 W
	GB/T/HG DN100 PN20(class150) Carbon steel GB/T/HG DN100 PN20(class150) SUS304 GB/T/HG DN100 PN20(class150) SUS316	Note20 Note20 Note20				C 0 C C 0 U C 0 W
	GB/T/HG DN100 PN50(class300) Carbon steel GB/T/HG DN100 PN50(class300) SUS304 GB/T/HG DN100 PN50(class300) SUS316	Note20 Note20 Note20				D 0 C D 0 U D 0 W
	GB/T/HG DN100 PN25/40 Carbon steel GB/T/HG DN100 PN25/40 SUS304 GB/T/HG DN100 PN25/40 SUS316	Note20 Note20 Note20				E 0 C E 0 U E 0 W
	GB/T/HG DN100 PN63 Carbon steel GB/T/HG DN100 PN63 SUS304 GB/T/HG DN100 PN63 SUS316	Note20 Note20 Note20				F 0 C F 0 U F 0 W
	GB/T/HG DN100 PN100 Carbon steel GB/T/HG DN100 PN100 SUS304 GB/T/HG DN100 PN100 SUS316	Note20 Note20 Note20				G 0 C G 0 U G 0 W
21	<Other> None High accuracy type Low temperature type H+J Inspection report	Note10				Y H J K F
22	<Flush ring> <Companion flange> Yes None None Yes Yes Yes	Note10				A B C

Note1) Only 100A, 4B, DN100 flange is available, when 13th digit code "S,T,K" .
Note2) Available only for 80A, 3B, DN80 flange.
Note3) Not available for square root mode.
Note4) Available only for 13th digit code "Y,W,G,A,D".
Note5) The ultra thick diaphragm is for the requirements of wear resistance or process condition of solid particle erosion.
Note6) Available only for 7th digit code "V,J,W,A,B,C,D,E,N,Q,S".
Note7) Available only for 7th digit code "H,F,G,K,L,T".
Note8) Not available for 7th digit code "M,T,P,R".
Note9) Available only for 80A, 3B, DN80 flange. But not available for 7th digit code "A,B,C,D,E,N,Q,S,F,G,K,L", and 13th digit code "H,J,S,T,K".
The operating pressure and temperature for using teflon diaphragm:
・Atmospheric pressure~max. operating pressure of flange(not available for vacuum)
・0 ~ 120° C

Note10) The digit is blank when not needed.
Note11) Not available for 10th digit code "C".
Note13) Other standard flanges are available.
Note14) For specific specifications, please refer to 16th to 19th digit code. RTJ flange is only available for 7th digit code "V,J"
Note15) Please note when select Fieldbus or Profibus transmitter. (Under development)
Note17) Available only for 4th digit code "5,S".
Note18) Available only for 4th digit code "6,8,T,W".
Note19) Available only for 4th digit code "6,T".
Note20) Please specify the flange specifications at "16th,17th,18th" digit code, when 5th digit code "Y"(Chinese flange).

Note21) Please specify the unequal diameter flange specifications at "16th,17th,18th" digit code, when 5th digit code "N". For unequal diameter flange, it should be carried out according to the principle as follow: high pressure side in the front and low pressure side in the back, separted by "/" in the middle, the17th digit code is 2 characters. For example, if the flange specification is PN2.0MPa, material SUS304, high pressure side flange DN50, low pressure side flange DN80, then 16th,17th,18th digit code is "C 5/8 U".
Note22) For unequal length capillary, it should be carried out according to the principle as follow: high pressure side in the front and low pressure side in the back, separted by "/" in the middle , the 11th digit code is 2 characters. For example, if using the plastic-coated capillary, high pressure side length is 3m, low pressure side length is 5m, then 11th digit code is "E/L".
Note23) The 8th digit code can be seleced as "S", this means that it's the transmitter with safety function. SIL2 capability for single transmitter use, SIL3 capability for dual transmitter use.

<Facing type is ring joint face(RTJ)>

Digit	Discriptions		Note	1 2 3 4 5 6 7 8	9 10 11 12 13	14 15 16 17 18 19 20	21 ← Digit No.
				F K D	-	- 0	-
16 17	Mounting flange						
	<Materials>	<Specifications>					
	304 Stainless steel	ANSI/JPI 600LB 3B				6 3	
		ANSI/JPI 600LB 4B				6 4	
		ANSI/JPI 900LB 3B				9 3	
		ANSI/JPI 900LB 4B				9 4	
		ANSI/JPI 1500LB 3B				1 3	
		ANSI/JPI 1500LB 4B				1 4	
		ANSI/JPI 2500LB 3B				2 3	
		ANSI/JPI 2500LB 4B				2 4	
	316 Stainless steel	ANSI/JPI 600LB 3B				4 1	
		ANSI/JPI 600LB 4B				4 2	
		ANSI/JPI 900LB 3B				4 3	
		ANSI/JPI 900LB 4B				4 4	
		ANSI/JPI 1500LB 3B				4 5	
		ANSI/JPI 1500LB 4B				4 6	
		ANSI/JPI 2500LB 3B				4 7	
		ANSI/JPI 2500LB 4B				4 8	
	Carbon steel	ANSI/JPI 600LB 3B				5 3	
		ANSI/JPI 600LB 4B				5 4	
		ANSI/JPI 900LB 3B				8 3	
		ANSI/JPI 900LB 4B				8 4	
		ANSI/JPI 1500LB 3B				3 3	
		ANSI/JPI 1500LB 4B				3 4	
		ANSI/JPI 2500LB 3B				7 3	
		ANSI/JPI 2500LB 4B				7 4	
	Without flange (disc type)	ANSI/JPI 600LB 3B				0 1	
		ANSI/JPI 600LB 4B				0 2	
		ANSI/JPI 900LB 3B				0 3	
		ANSI/JPI 900LB 4B				0 4	
		ANSI/JPI 1500LB 3B				0 5	
		ANSI/JPI 1500LB 4B				0 6	
		ANSI/JPI 2500LB 3B				0 7	
		ANSI/JPI 2500LB 4B				0 8	
18	<Gasket(applicable for RTJ)> None Yes					Y A	
19	<Companion flange> None Yes					Y A	
20	<Fixed code>						Y
21	<Fixed code>						Y

Note)When ordering the transmitters with high pressure flange and the facing type is ring joint face(RTJ), the 5th digit code is "I", and should specify the 16th to19th digit code.

<Unequal diameter flange>

Digit	Discriptions		Note	1 2 3 4 5 6 7 8	9 10 11 12 13	14 15 16 17 18 19 20	21 ← Digit No.
				F K D	-	- 0	-
16 17 18	Standard	Flange specifications and materials					
	GB/T/HG	PN10/16				B	
		PN20(class 150)				C	
		PN50(class 300)				D	
		PN25/40				E	
		PN63				F	
		PN100				G	
		DN80	Note21			8	
		DN50	Note21			5	
		Materials					
		SUS304				U	
		SUS316				W	
		Carbon steel				C	
19	<Companion flange> None Yes					Y A	
20	<Fixed code>						Y
21	<Fixed code>						Y

Note) When ording the transmitters with unequal diameter flange specification, the 5th digit code "N", and should specify the 16th, 17th, 18th digit code.

FKD

OUTLINE DIAGRAM (Unit: mm)

<AMP. CASE: L TYPE>

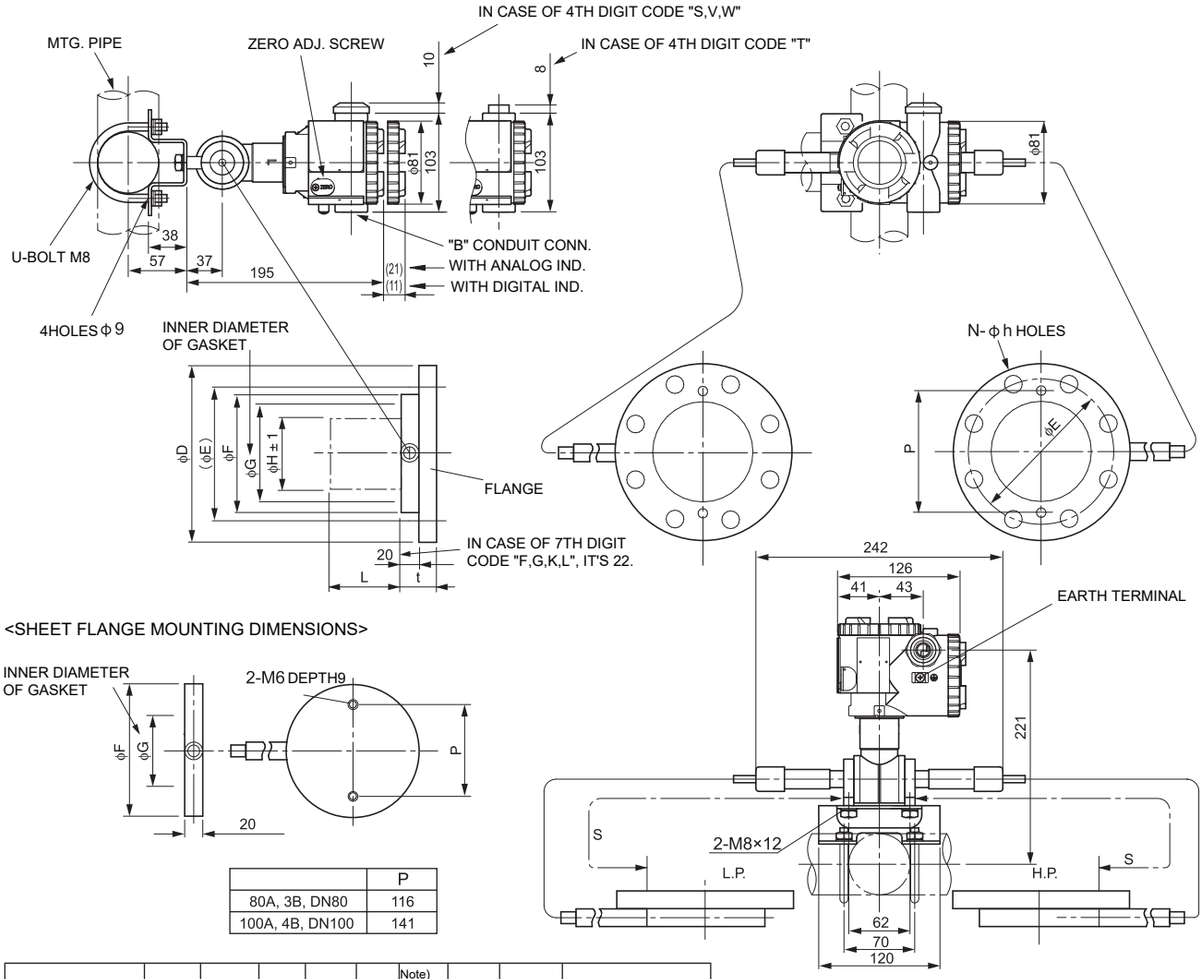

<SHEET FLANGE MOUNTING DIMENSIONS>

	P
80A, 3B, DN80	116
100A, 4B, DN100	141

5th digit code	øD	øE	øF	øG	øH±1	Note) t	P	N-øh	Flange
0，A	185	150	126	100	73	38	116	8-19	JIS-10K-80A
2，C	210	170	126	100	73	48	116	8-23	JIS-30K-80A
1，B	210	175	151	103	96	38	141	8-19	JIS-10K-100A
3，D	240	195	151	103	96	52	141	8-25	JIS-30K-100A
4，E	191	152.5	126	100	73	44	116	4-20	ANSI 150LB 3B
6，G	210	168	126	100	73	49	116	8-23	ANSI 300LB 3B
5，F	229	190.5	151	103	96	44	141	8-20	ANSI 150LB 4B
7，H	254	200	151	103	96	52	141	8-23	ANSI 300LB 4B

Note) In case of 7th digit code "F,G,K,L", the dimensions of "t" should all increase of 2mm.

16th to 18th digit code	øD	øE	øF	øG	øH±1	t	P	N-øh	Flange
B8C, B8U, B8W	200	160	126	100	73	40	116	8-18	GB/T / HG DN80 PN10/16
C8C, C8U, C8W	190	152.5	126	100	73	44	116	4-18	GB/T / HG DN80 PN20
E8C, E8U, E8W	200	160	126	100	73	44	116	8-18	GB/T / HG DN80 PN25/40
D8C, D8U, D8W	210	168.5	126	100	73	49	116	8-22	GB/T / HG DN80 PN50
F8C, F8U, F8W	215	170	126	100	73	48	116	8-22	GB/T / HG DN80 PN63
G8C, G8U, G8W	230	180	126	100	73	52	116	8-26	GB/T / HG DN80 PN100
B0C, B0U, B0W	220	180	151	103	96	42	141	8-18	GB/T / HG DN100 PN10/16
C0C, C0U, C0W	230	190.5	151	103	96	44	141	8-18	GB/T / HG DN100 PN20
E0C, E0U, E0W	235	190	151	103	96	44	141	8-22	GB/T / HG DN100 PN25/40
D0C, D0U, D0W	255	200	151	103	96	52	141	8-22	GB/T / HG DN100 PN50
F0C, F0U, F0W	250	200	151	103	96	50	141	8-26	GB/T / HG DN100 PN63
G0C, G0U, G0W	265	210	151	103	96	56	141	8-30	GB/T / HG DN100 PN100

4th digit code	Conduit conn.		
	J	K	M
S	G 1/2	18	2
T	1/2-14NPT	16	4
V	Pg13.5	10.5	4.5
W	M20×1.5	16	4

TABLE2

DETAIL "B"

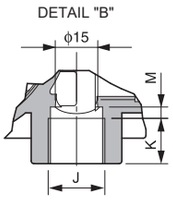

SEE TABLE2

7th digit code	L	Weight(kg)
V，J，H，M，T，P，R	0	12.7～18.2
A, E, F	50	13.7～29.2
B, N, G	100	14.2～29.7
C, Q, K	150	14.7～30.2
D, S, L	200	15.2～30.7

11th digit code	S(m)
D，Q	1.5
E，R	3
L，S	5
F，T	6
M，V	7
N，W	8
P，X	10
G，J	12
H，K	15

<SS TAG PLATE(OPTIONAL)>

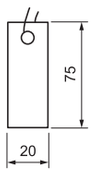

<CONNECTION DIAGRAM>

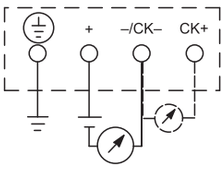

<OPTIONAL PARTS FOR FLAMEPROOF OF TIIS> (OMITTED)

<AMP. CASE: T TYPE>

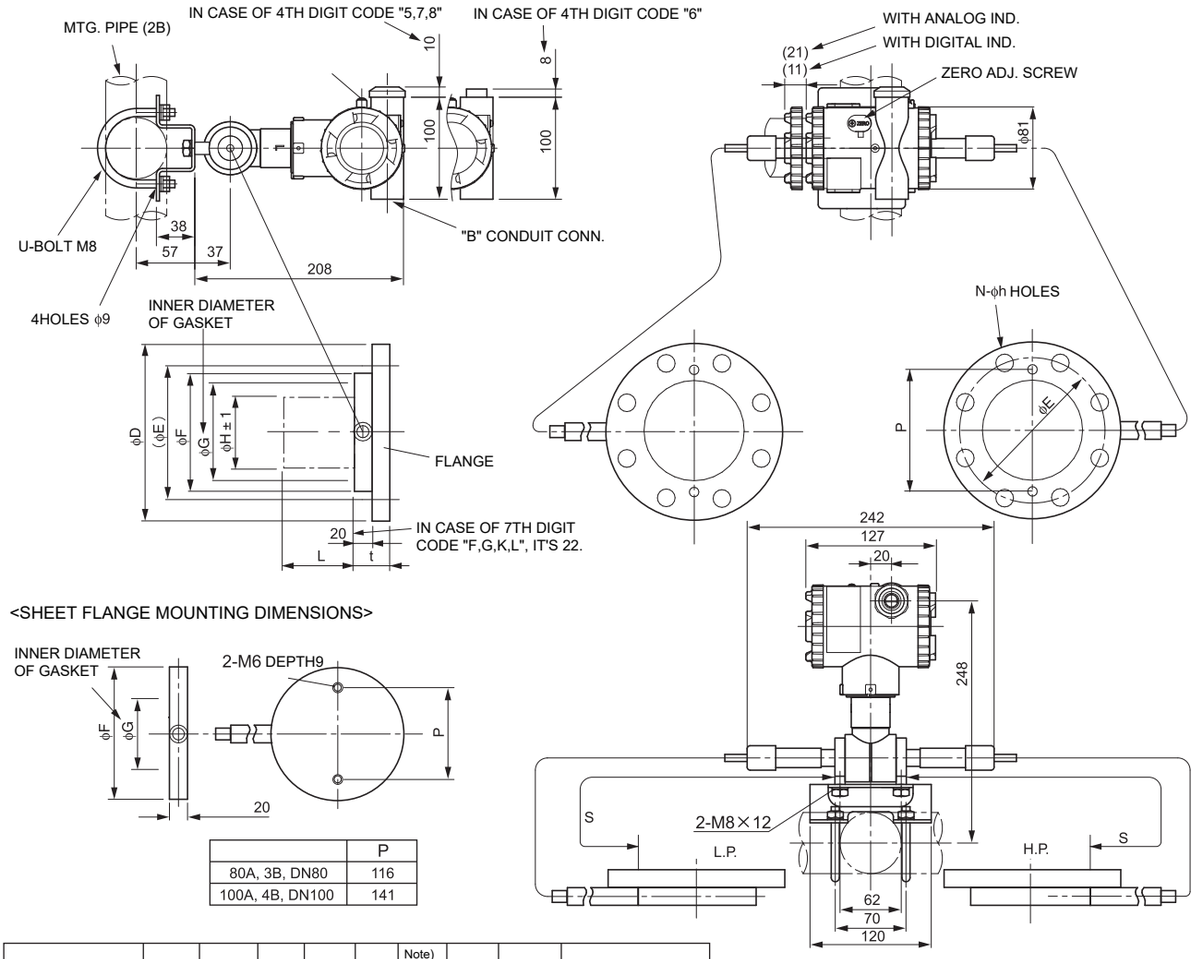

<SHEET FLANGE MOUNTING DIMENSIONS>

	P
80A, 3B, DN80	116
100A, 4B, DN100	141

5th digit code	øD	øE	øF	øG	øH±1	Note) t	P	N-øh	Flange
0，A	185	150	126	100	73	38	116	8-19	JIS-10K-80A
2，C	210	170	126	100	73	48	116	8-23	JIS-30K-80A
1，B	210	175	151	103	96	38	141	8-19	JIS-10K-100A
3，D	240	195	151	103	96	52	141	8-25	JIS-30K-100A
4，E	191	152.5	126	100	73	44	116	4-20	ANSI 150LB 3B
6，G	210	168	126	100	73	49	116	8-23	ANSI 300LB 3B
5，F	229	190.5	151	103	96	44	141	8-20	ANSI 150LB 4B
7，H	254	200	151	103	96	52	141	8-23	ANSI 300LB 4B

Note) In case of 7th digit code "F,G,K,L", the dimensions of "t" should all increase of 2mm.

16th to 18th digit code	øD	øE	øF	øG	øH±1	t	P	N-øh	Flange
B8C, B8U, B8W	200	160	126	100	73	40	116	8-18	GB/T / HG DN80 PN10/16
C8C, C8U, C8W	190	152.5	126	100	73	44	116	4-18	GB/T / HG DN80 PN20
E8C, E8U, E8W	200	160	126	100	73	44	116	8-18	GB/T / HG DN80 PN25/40
D8C, D8U, D8W	210	168.5	126	100	73	49	116	8-22	GB/T / HG DN80 PN50
F8C, F8U, F8W	215	170	126	100	73	48	116	8-22	GB/T / HG DN80 PN63
G8C, G8U, G8W	230	180	126	100	73	52	116	8-26	GB/T / HG DN80 PN100
B0C, B0U, B0W	220	180	151	103	96	42	141	8-18	GB/T / HG DN100 PN10/16
C0C, C0U, C0W	230	190.5	151	103	96	44	141	8-18	GB/T / HG DN100 PN20
E0C, E0U, E0W	235	190	151	103	96	44	141	8-22	GB/T / HG DN100 PN25/40
D0C, D0U, D0W	255	200	151	103	96	52	141	8-22	GB/T / HG DN100 PN50
F0C, F0U, F0W	250	200	151	103	96	50	141	8-26	GB/T / HG DN100 PN63
G0C, G0U, G0W	265	210	151	103	96	56	141	8-30	GB/T / HG DN100 PN100

4th digit code	Conduit conn.		
	J	K	M
5	G 1/2	18	2
6	1/2-14NPT	16	4
7	Pg13.5	10.5	4.5
8	M20×1.5	16	4

TABLE2

DETAIL "B"

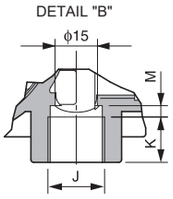

SEE TABLE2

7th digit code	L	Weight(kg)
V，J，H，M，T，P，R	0	12.7～18.2
A, E, F	50	13.7～29.2
B, N, G	100	14.2～29.7
C, Q, K	150	14.7～30.2
D, S, L	200	15.2～30.7

11th digit code	S(m)
D，Q	1.5
E，R	3
L，S	5
F，T	6
M，V	7
N，W	8
P，X	10
G，J	12
H，K	15

<SS TAG PLATE(OPTIONAL)>

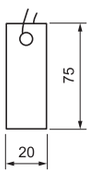

<CONNECTION DIAGRAM>

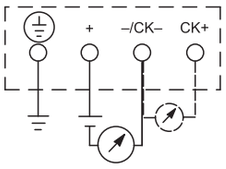

<OPTIONAL PARTS FOR FLAMEPROOF OF TIIS> (OMITTED)

FKD

<APPLICABLE FOR THE FACING TYPE OF FLANGE IS RING JOINT FACE(RTJ)>

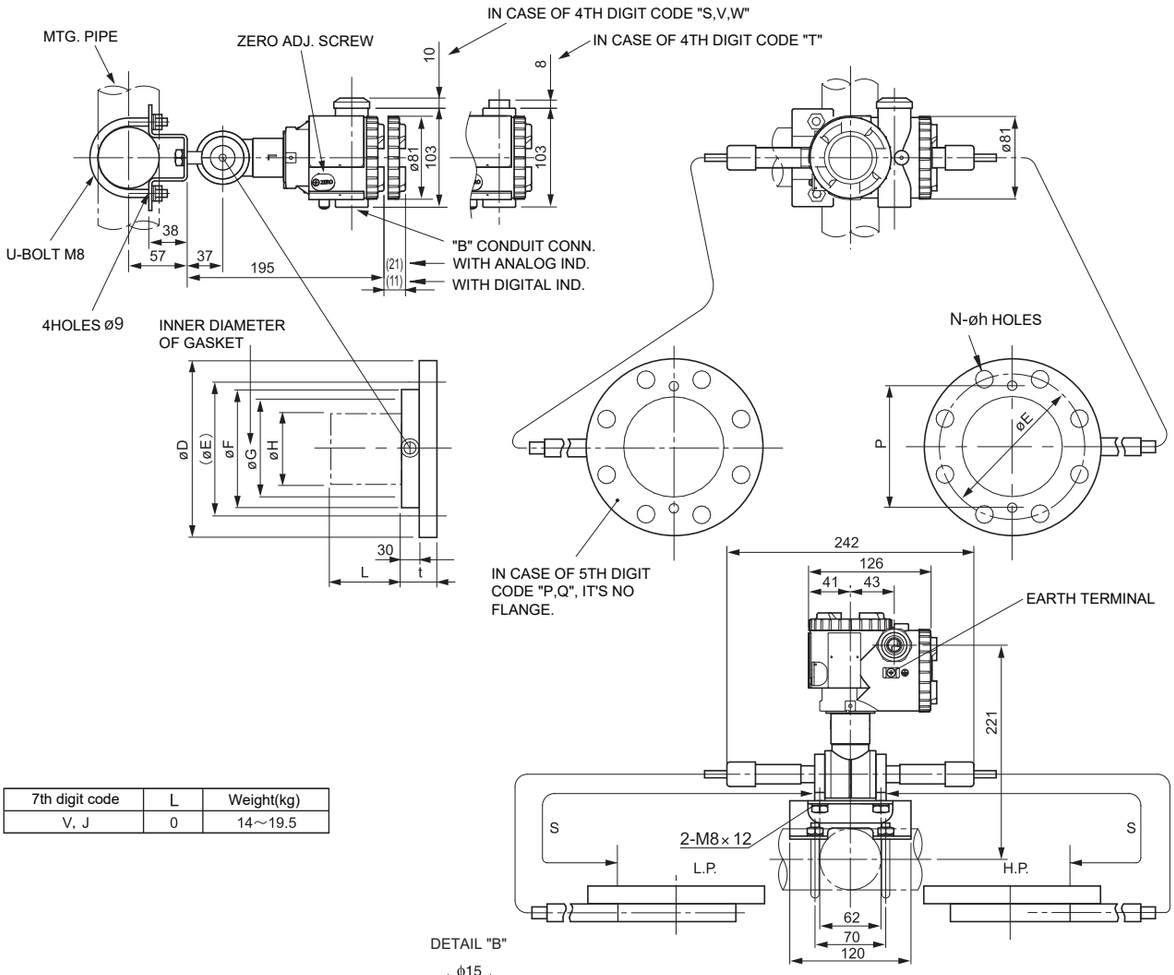

7th digit code	L	Weight(kg)
V, J	0	14～19.5

DETAIL "B"

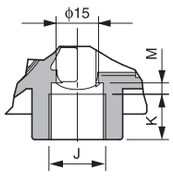

SEE TABLE3

4th digit code	Conduit conn.		
	J	K	M
5, S	G 1/2	17	8
6, T	1/2-14NPT	16	5
7, V	Pg13.5	8	4.5
8, W	M20×1.5	16	5

TABLE3

16th, 17th digit code	ϕD	ϕE	ϕF	ϕG	ϕH	t	P	N-ϕh	Flange specification
41, 53, 63	210	168.3	144	123.82	73	62	116	8-23	ANSI 600LB 3B
42, 54, 64	273	216	175	149.22	96	68.5	141	8-26	ANSI 600LB 4B
43, 83, 93	241	190.5	156	123.82	73	68.5	141	8-26	ANSI 900LB 3B
44, 84, 94	292	235	181	149.22	96	74.5	141	8-32	ANSI 900LB 4B
45, 33, 13	267	203	168	136.52	73	78	141	8-32	ANSI 1500LB 3B
46, 34, 14	310	241.5	194	161.92	96	84	141	8-36	ANSI 1500LB 4B
47, 73, 23	305	288.6	168	127	73	96.5	141	8-36	ANSI 2500LB 3B
48, 74, 24	356	273	203	157.19	96	106	141	8-42	ANSI 2500LB 4B

11th digit code	S(m)
D, Q	1.5
E, R	3
L, S	5
F, T	6
M, V	7
N, W	8
P, X	10
G, J	12
H, K	15

<OPTIONAL PARTS FOR FLAMEPROOF OF TIIS>

10th digit code C (Cable gland type) NOTE 1)

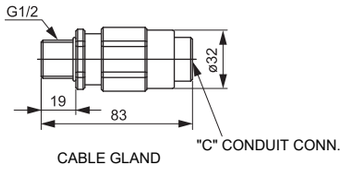

DETAIL "C"

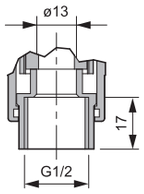

NOTE1) IN CASE OF 10TH DIGIT CODE "C", Φ11 CABLE IS SUITBLE.

<SS TAG PLATE(OPTIONAL)>

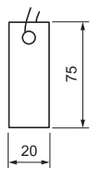

<CONNECTION DIAGRAM>

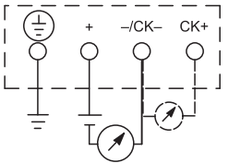

<The facing dimensions of ring joint face(RTJ) flange>

No.	16th, 17th digit code	ΦF	Seal groove dimensions				ΦH	P	Flange specifications
			Pitch diameter Φ(G)	Depth(E)	Width(F)	Radius(R)			
1	01	144	123.82	7.92	11.91	0.76	73	116	ANSI 600LB 3B
2	02	175	149.22	7.92	11.91	0.76	96	141	ANSI 600LB 4B
3	03	156	123.82	7.92	11.91	0.76	73	141	ANSI 900LB 3B
4	04	181	149.22	7.92	11.91	0.76	96	141	ANSI 900LB 4B
5	05	168	136.52	7.92	11.91	0.76	73	141	ANSI 1500LB 3B
6	06	194	161.92	7.92	11.91	0.76	96	141	ANSI 1500LB 4B
7	07	168	127	9.52	13.49	1.52	73	141	ANSI 2500LB 3B
8	08	203	157.18	11.12	16.66	1.52	96	141	ANSI 2500LB 4B

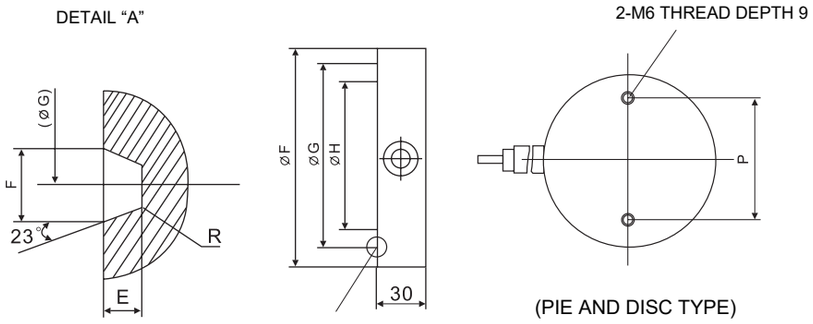

SEAL GROOVE "A" DIMENSION

Note: Flange is not in the scope of supply when ording the pie and disc type transmitter.
The mounting flange matched by users, please refer to the other views.

FKD

Table 4 Explosion proof

Authorities	Intrinsic safety
ATEX	Ex II 1 G Ex ia II C T5 Tamb = -40°C ~ +50°C Ex ia II C T4 Tamb = -40°C ~ +70°C Entity Parameters: Ui = 28V, Ii = 94.3mA, Pi = 0.66W Ci = 26nF(without arrester), Li = 0.6mH(without analog indicator) Ci = 36nF(with arrester), Li = 0.7mH(with analog indicator)
FM	Class I II III DIV.1 Groups A, B, C, D, E, F, G T4 Entity Type 4X Model: 9th digit / 13th digit; Tamb A,B,D / Y,G,N / -40°C ~ +85°C L,P,1,2 / Y,G,N / -20°C ~ +80°C Q,S,4,5 / Y,G,N / -20°C ~ +60°C E,F,H / Y,G,N / -40°C ~ +60°C – / W,A,D / -10°C ~ +60°C Entity Parameters: Vmax = 28V, Imax = 94.3mA, Pi = 0.66W, Ci = 35.98nF, Li = 0.694mH
CSA	Class I Div.1 Groups A, B, C, D Class II Div.1 Groups E, F, G Class III Div.1 Temp code T5 Tamb max = +50°C Temp code T4 Tamb max = +70°C Entity Parameters: Vmax = 28V Imax = 94.3mA Ci = 25nF(without arrester), Li = 0.6mH(without analog indicator) Ci = 36nF(with arrester), Li = 0.7mH(with abalig indicator)
TIIS	Ex ia IIC T4 Tamb max = +60°C Entity Parameters: Ui = 28V, I i = 94.3mA, Pi = 0.66W, Ci = 38.4nF, Li = 0.694mH
IECEx Scheme	Ex ia II C T4 Tamb = -40°C ~ +70°C Ex ia II C T5 Tamb = -40°C ~ +50°C Entity Parameters: Ui = 28V Ii = 94.3mA Pi = 0.66W Ci = 26nF(without arrester), Li = 0.6mH(without analog indicator) Ci = 36nF(with arrester), Li = 0.7mH(with abalig indicator)
NEPSI	Ex ia IIC T4 Ex d IIB+H_2T6/Ex ia IIC T4 Model: 9th digit / 13th digit; Tamb A,B,D / Y,G,N / -40°C ~ +85°C L,P,1,2 / Y,G,N / -20°C ~ +80°C Q,S,4,5 / Y,G,N / -20°C ~ +60°C E F H / Y,G,N / -40°C ~ +60°C – / W,A,D / -10°C ~ +60°C Entity Parameters: Ui = 42.4V, Ii = 113mA, Pi = 1W, Ci = 35.98nF, Li = 0.694mH

Authorities	Flameproof
ATEX	Ex II 2 GD EEx d II C T6 IP66/67 T85°C Tamb = -40°C ~ +65°C EEx d II C T5 IP66/67 T100°C Tamb = -40°C ~ +85°C
FM	Class I Div.1 Groups B, C, D T6 Type 4X Class II III Div.1 Groups E, F, G T6 Type 4X Tamb max = +60°C
CSA	Class I Div.1 Groups C, D Class II Div.1 Groups E, F, G Class III Div.1 Note) "Seal Not Required" enclosure is allowed.
TIIS	Ex do IIB+H_2 T4 Tamb max = +60°C Maximum process temp. = +120°C
IECEx Scheme	Ex d II C T5 IP66/67 Tamb = -40°C ~ +85°C Ex d II C T6 IP66/67 Tamb = -40°C ~ +65°C
NEPSI	Ex d II B+H_2 T6 Tamb = -40°C ~ +60°C

Authorities	Type n Nonincendive
ATEX	Ex II3 GD EEx nL IIC T5 Tamb = -40°C ~ +50°C EEx nL IIC T4 Tamb = -40°C ~ +70°C Specific Parameters: Model without arrester: Ui=42.4V, Ii=113mA, Pi=1W, Ci=25.18nF, Li=0.694mH Model with arrester: Ui=32V, Ii=113mA, Pi=1W, Ci=35.98nF, Li=0.694mH EEx nAL IIC T5 Tamb = -40°C ~ +50°C EEx nAL IIC T4 Tamb = -40°C ~ +70°C Specific Parameters: Model without arrester: Umax=42.4V, Imax=113mA, Pmax=1W Model with arrester: Umax=32V, Imax=113mA, Pmax=1W
FM	Class I II III Div.2 Groups A、B、C、D、F、G T4 Entity Type 4X Model: 9th digit / 13th digit; Tamb A,B,D / Y,G,N / -40°C ~ +85°C L,P,1,2 / Y,G,N / -20°C ~ +80°C Q,S,4,5 / Y,G,N / -20°C ~ +60°C E,F,H / Y,G,N / -40°C ~ +60°C – / W,A,D / -10°C ~ +60°C
CSA	Class I Div.2 Groups A, B, C, D Class II Div.2 Groups E, F, G Class III Div.2 Temp code T5 Tamb max = +50°C Temp code T4 Tamb max = +70°C Entity Parameters: Vmax=28V,Ci=25.18nF (without arrester), Ci=35.98nF (with arrester), Li=0.694mH

⚠ Caution on Safety

* Before using this product, be sure to read its instruction manual in advance.

FKD